User Manual

Version 1.1 July 2014

Point-of-Sale Hardware System

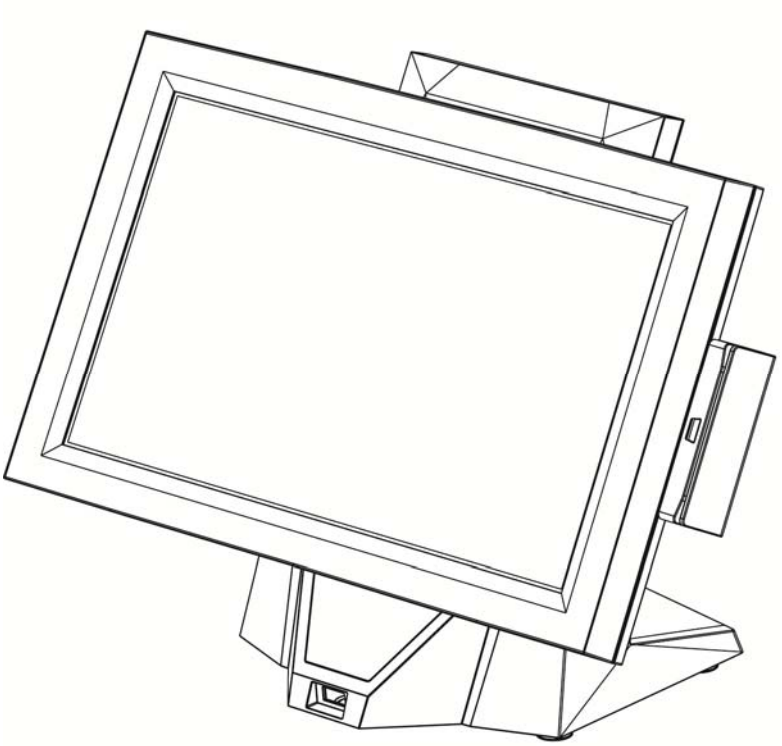

Manual Version 1.1
Part Number: 3LMPP3140111

TRADEMARK

Safety

IMPORTANT SAFETY INSTRUCTIONS

1. To disconnect the machine from the electrical Power Supply, turn off the power switch and remove the power cord plug from the wall socket. The wall socket must be easily accessible and in close proximity to the machine.
2. Read these instructions carefully. Save these instructions for future reference.
3. Follow all warnings and instructions marked on the product.
4. Do not use this product near water.
5. Do not place this product on an unstable cart, stand, or table. The product may fall, causing serious damage to the product.
6. Slots and openings in the cabinet and the back or bottom are provided for ventilation; to ensure reliable operation of the product and to protect it from overheating. These openings must not be blocked or covered. The openings should never be blocked by placing the product on a bed, sofa, rug, or other similar surface. This product should never be placed near or over a radiator or heat register, or in a built-in installation unless proper ventilation is provided.
7. This product should be operated from the type of power indicated on the marking label. If you are not sure of the type of power available, consult your dealer or local power company.
8. Do not allow anything to rest on the power cord. Do not locate this product where persons will walk on the cord.
9. Never push objects of any kind into this product through cabinet slots as they may touch dangerous voltage points or short out parts that could result in a fire or electric shock. Never spill liquid of any kind on the product.

CE MARK

This device complies with the requirements of the EEC directive 2004/108/EC with regard to “Electromagnetic compatibility” and 2006/95/EC “Low Voltage Directive”

FCC

This device complies with part 15 of the FCC rules. Operation is subject to the following two conditions:
(1) This device may not cause harmful interference.
(2) This device must accept any interference received, including interference that may cause undesired operation

CAUTION ON LITHIUM BATTERIES

There is a danger of explosion if the battery is replaced incorrectly. Replace only with the same or equivalent type recommended by the manufacturer. Discard used batteries according to the manufacturer's instructions.

Battery Caution

Risk of explosion if battery is replaced by an incorrectly type.
Dispose of used battery according to the local disposal instructions.

Safety Caution

Note: To comply with IEC60950-1 Clause 2.5 (limited power sources, L.P.S) related legislation, peripherals shall be 4.7.3.2 "Materials for fire enclosure" compliant.

4.7.3.2 Materials for fire enclosures

For MOVABLE EQUIPMENT having a total mass not exceeding 18kg.the material of a FIRE ENCLOSURE, in the thinnest significant wall thickness used, shall be of V-1 CLASS MATERIAL or shall pass the test of Clause A.2.
For MOVABLE EQUIPMENT having a total mass exceeding 18kg and for all STATIONARY EQUIPMENT, the material of a FIRE ENCLOSURE, in the thinnest significant wall thickness used, shall be of 5VB CLASS MATERIAL or shall pass the test of Clause A.1

LEGISLATION AND WEEE SYMBOL

2012/19/EU Waste Electrical and Electronic Equipment Directive on the treatment, collection, recycling and disposal of electric and electronic devices and their components.

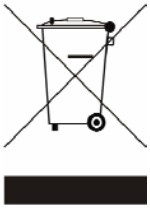

The crossed dustbin symbol on the device means that it should not be disposed of with other household wastes at the end of its working life. Instead, the device should be taken to the waste collection centers for activation of the treatment, collection, recycling and disposal procedure.
To prevent possible harm to the environment or human health from uncontrolled waste disposal, please separate this from other types of wastes and recycle it responsibly to promote the sustainable reuse of material resources.

Household users should contact either the retailer where they purchased this product, or their local government office, for details of where and how they can take this item for environmentally safe recycling.

Business users should contact their supplier and check the terms and conditions of the purchase contract.

This product should not be mixed with other commercial wastes for disposal.

Revision History

Revision	Date	Description
V1.0	April, 2014	● Release
V1.1	July, 2014	● D16 motherboard added

Table of Contents

1 Item Checklist

1-1 Standard Items

	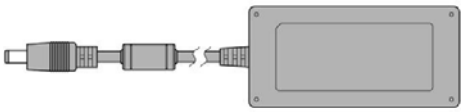
a. System	b. Power adapter (65W)
	
c. Power cable	d. COM-RJ45 cable (x2)
	
e. Driver CD	

1-2 Optional Items

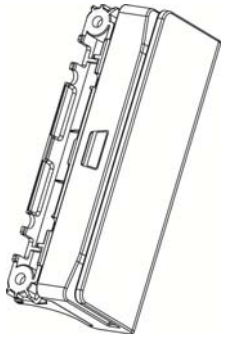	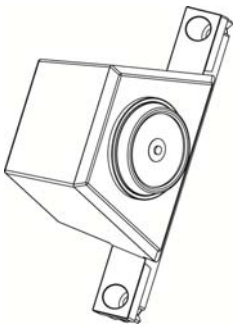
a. MSR module	b. iButton module
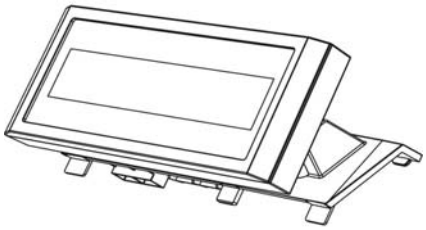	
c. Customer display	d. 2nd display

2 System View

2-1 Front View & Side View

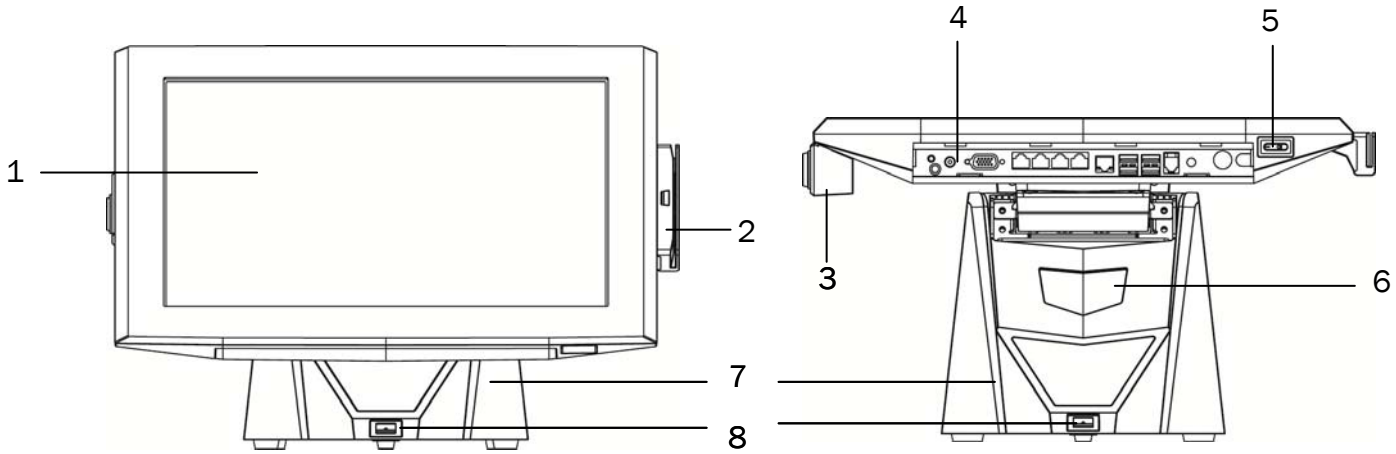

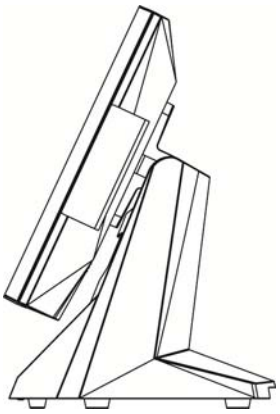

No.	Description
1	Touch screen
2	MSR
3	iButton
4	IO panel
5	Power button
6	Stand hole for cables outlet
7	Stand
8	USB

2-2 Rear & Bottom View

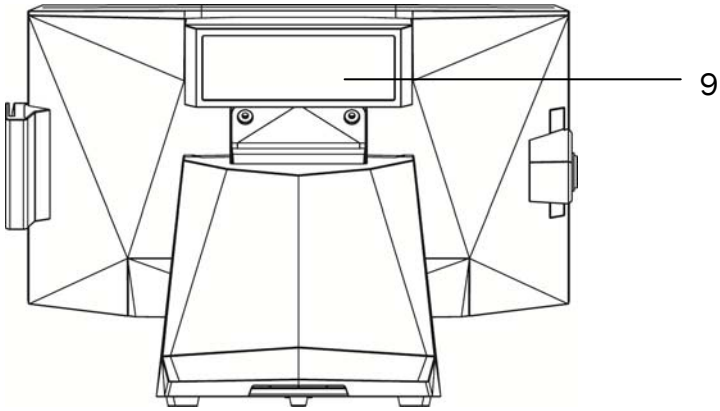

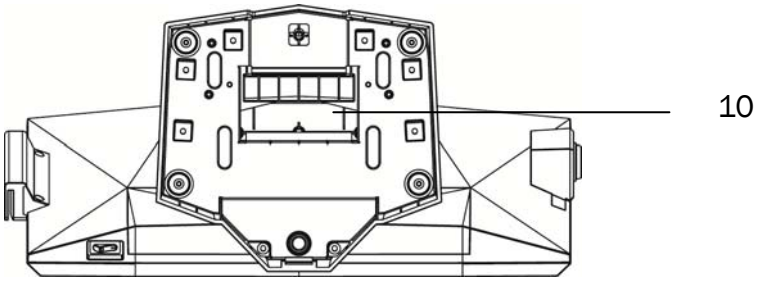

No.	Description
9	VFD
10	Stand hole for cables outlet

2-3 Dimension

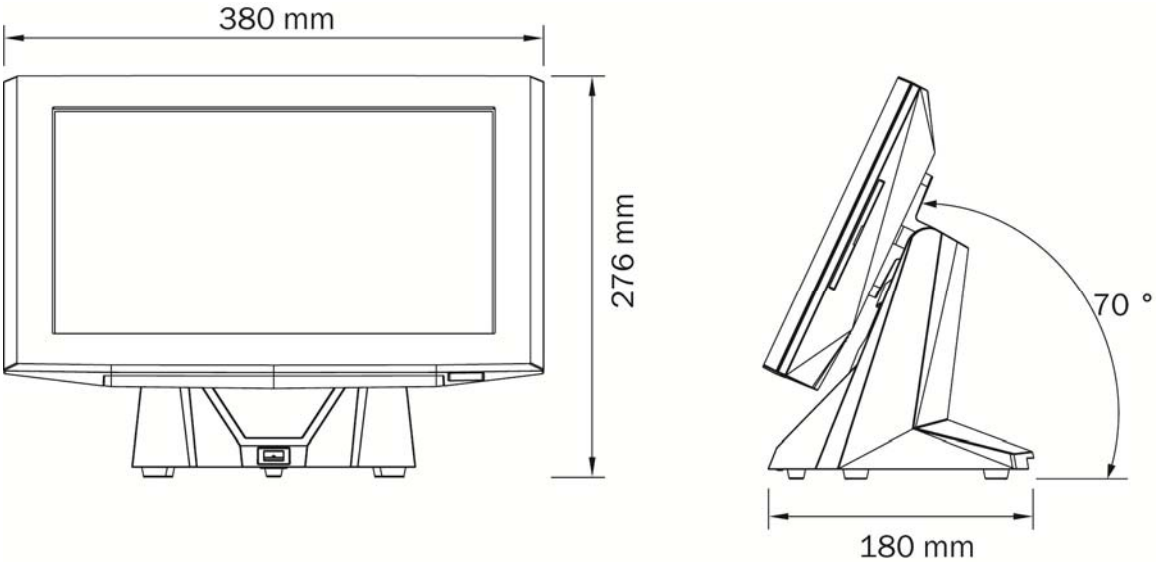

2-4 I/O View

C56L Motherboard

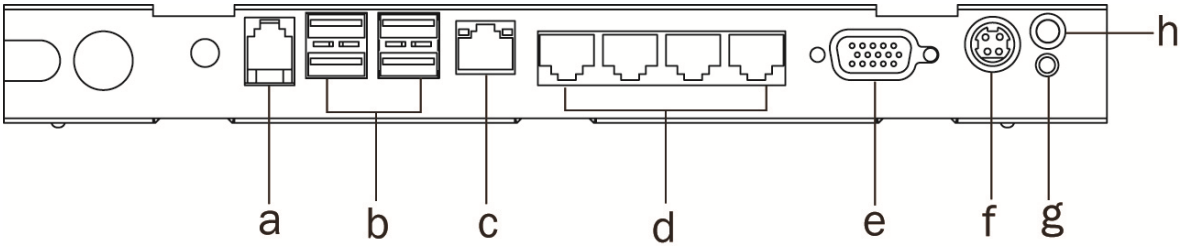

Number	Description
a	Cash drawer
b	USB x 4 (USB2.0)
c	LAN
d	COM1~4 (from left to right)
e	VGA
f	DC Jack 19V
g	Power button
h	Power LED

D16 Motherboard

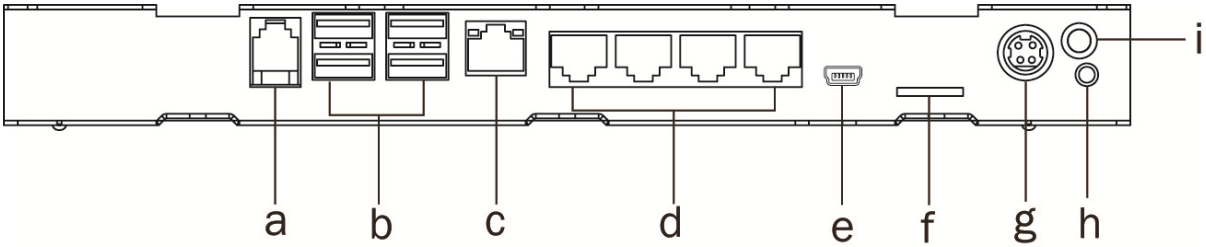

No.	Description
a	Cash drawer
b	USB x 4 (USB2.0)
c	LAN
d	COM1~4 (from left to right)
e	Mini USB
f	Micro SD
g	DC Jack 19V
h	Power button
i	Power LED

3 System Assembly & Disassembly

3-1 Install the Power Adapter

The system is equipped with a power adapter. Please plug it into the system as shown below.

1. Put the power adapter outside the stand base and route the power cable through the stand gap as shown in the picture.

2. Find the DC Jack on the I/O panel.(refer to chapter 2-4.) and connect the power cable directly to the DC Jack connector.

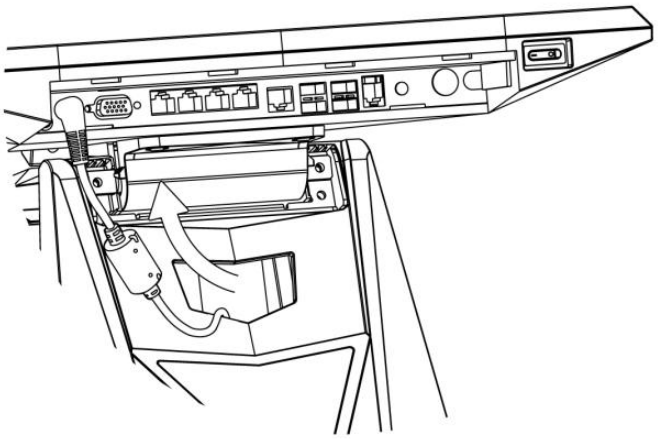

3-2 Replace the HDD

1. Remove the HDD dummy cover.

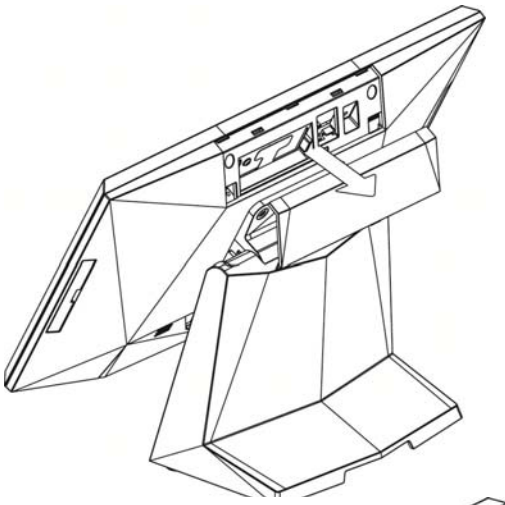

2. Hold the plastic tab and pull the HDD outward.

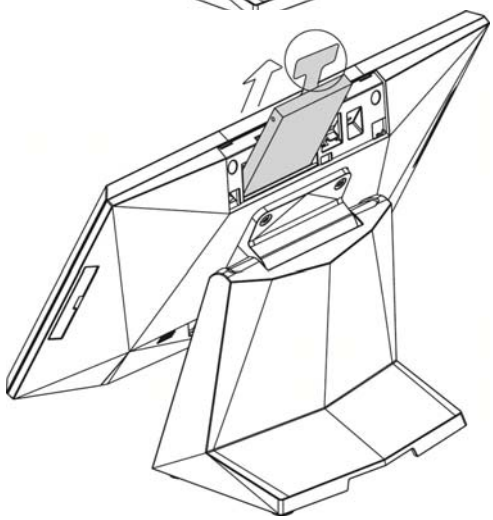

3-3 Disassemble the Stand

1. To separate the stand and the LCD monitor, remove the screws (x2) from the stand hinge directly.

2. Reverse the steps above to attach stand to the system.

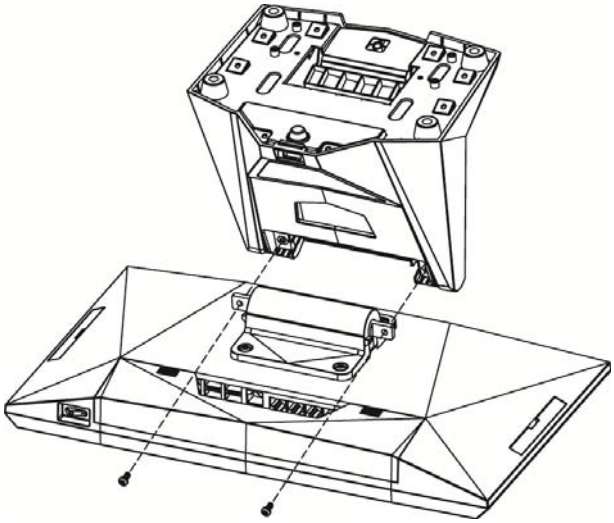

4 Peripherals Installation

4-1 Install the MSR Module

MSR/iButton module can be installed to either side of the system. Choose one side and follow the steps below. Make sure the unit is powered down before starting.

1. Remove the dummy cover first.

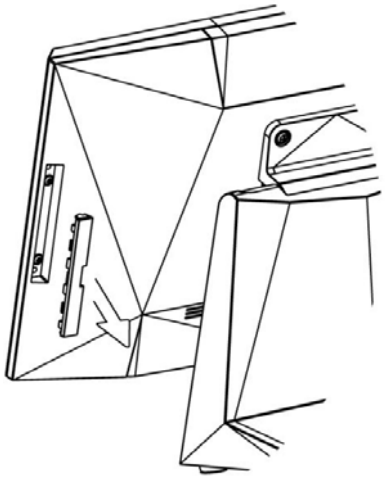

2. Connect the MSR cable to the connector on the system side.

3. Insert the MSR module in place and fasten the screws (x2) on the back to secure the module.

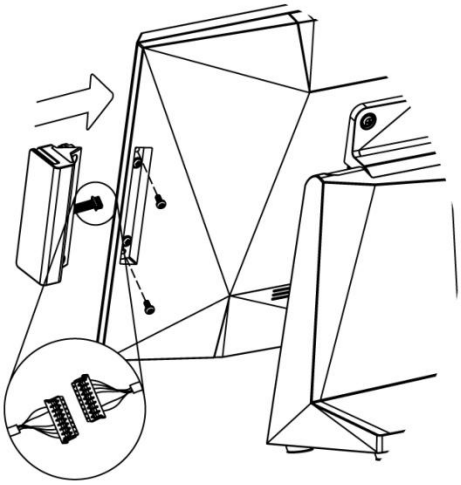

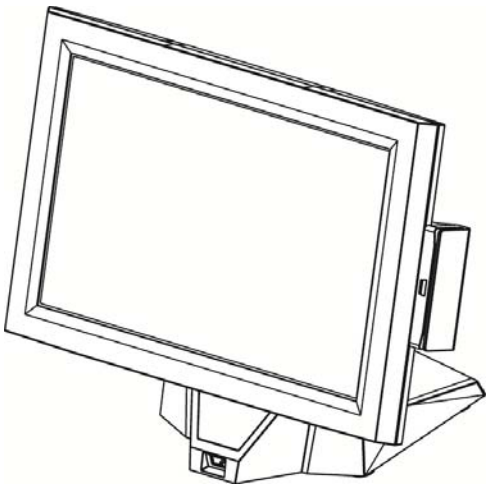

4-2 Install the iButton Module

1. Remove the dummy cover first.

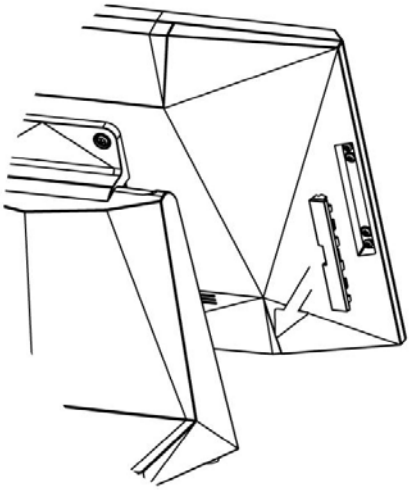

2. Connect the iButton cable to the connector on the system side.

3. Insert the iButton module in place and fasten the screws (x2) on the back to secure the module.

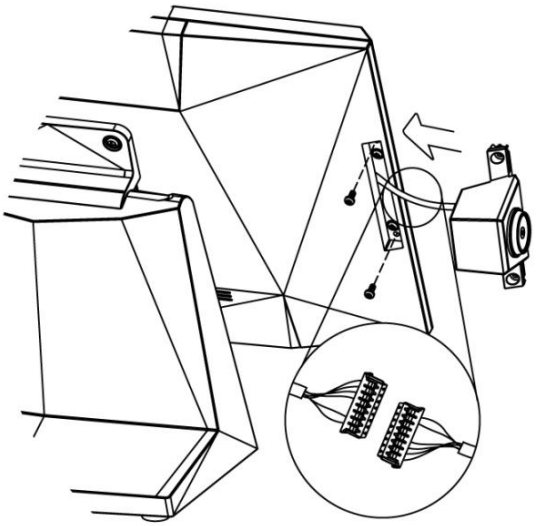

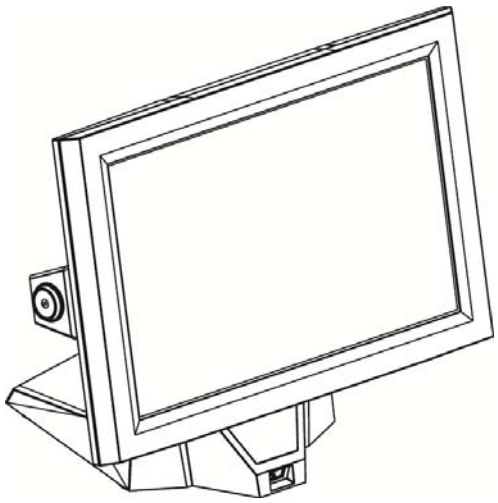

4-3 Install the Customer Display

1. Remove the HDD dummy cover first.

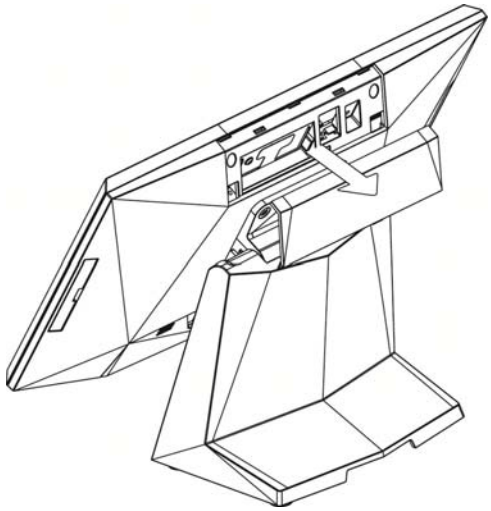

2. Connect the customer display cable (x1) to the connector on system side.

3. Attach the customer display and fasten the screws (x2) to fix it.

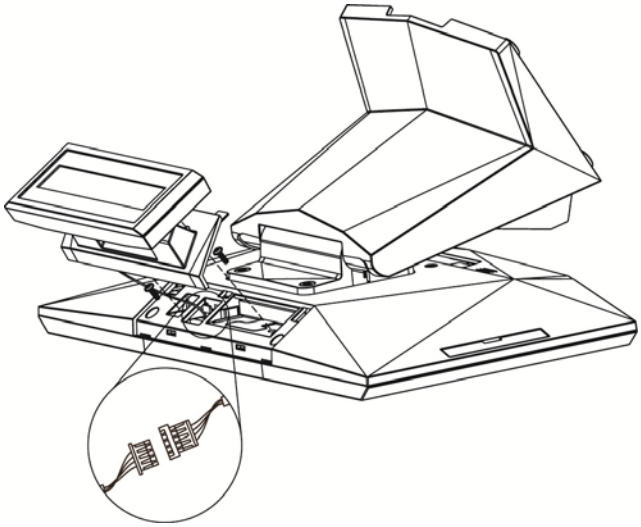

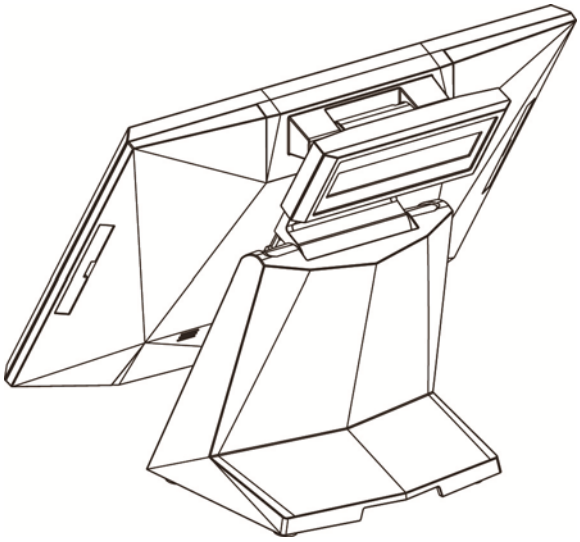

4-4 Install the 2nd Display

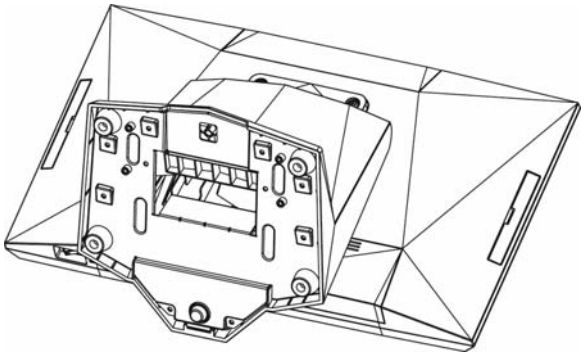

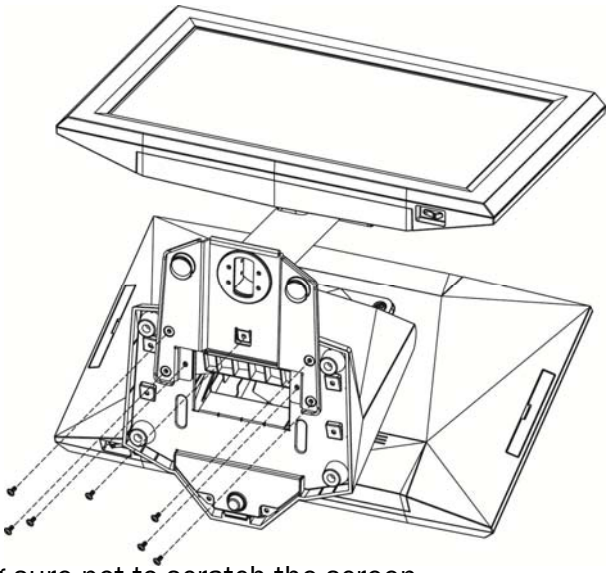

1. Place the system face down. Making sure not to scratch the screen.
2. Attach the 2nd display module to the bottom of the stand. Fix the stand with 2nd display module with screws (x7).

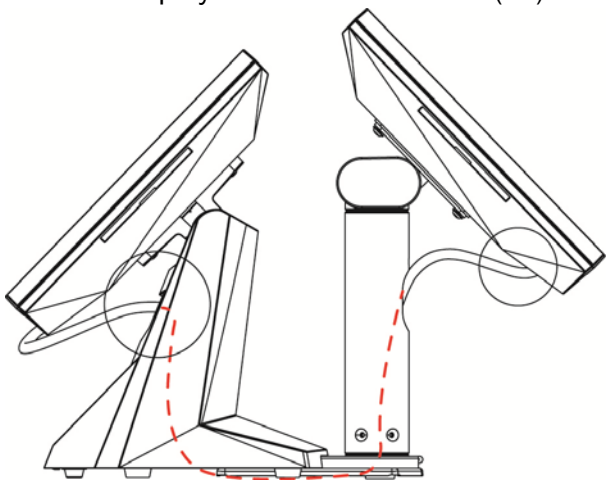

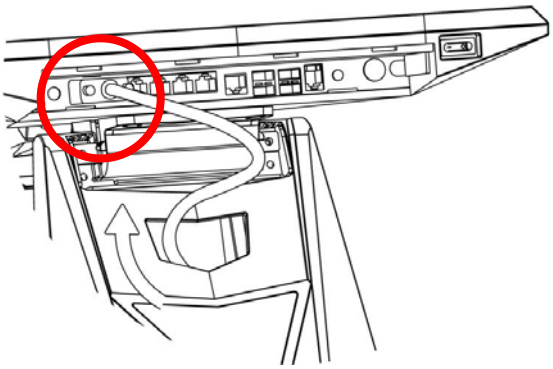

3. Thread two ends of the VGA cable respectively through the gaps on the 2nd display and system stand as shown in the above picture.
4. When the VGA cable is routed through the stand gap, connect the other end of the cable to the system port.

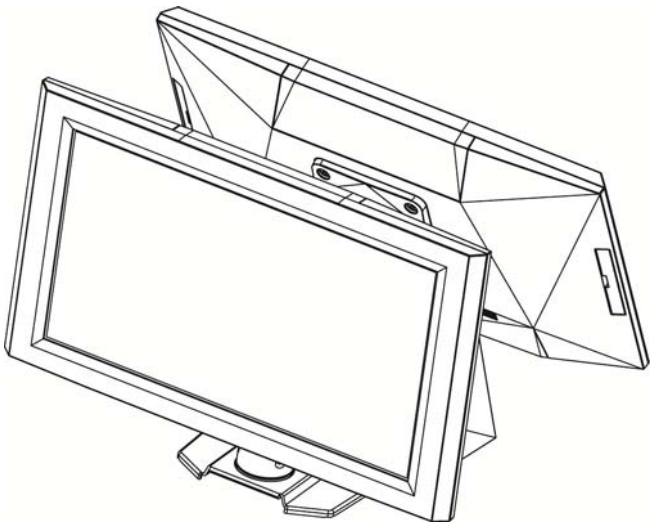

4-5 Install the Cash Drawer

You can install a cash drawer through the cash drawer port. Please verify the pin assignment before installation.

Cash Drawer Pin Assignment

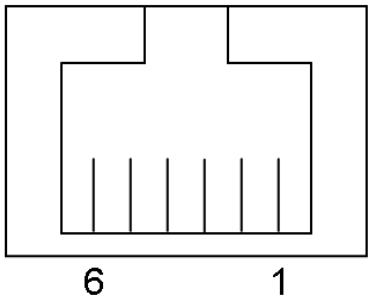

Pin	Signal
1	GND
2	DOUT bit0
3	DIN bit0
4	12V / 19V
5	DOUT bit1
6	GND

Cash Drawer Controller Register

The Cash Drawer Controller use one I/O addresses to control the Cash Drawer.

Register Location: 48Ch
Attribute: Read / Write
Size: 8bit

BIT	BIT7	BIT6	BIT5	BIT4	BIT3	BIT2	BIT1	BIT0
Attribute	Reserved	Read	Reserved		Write		Reserved	

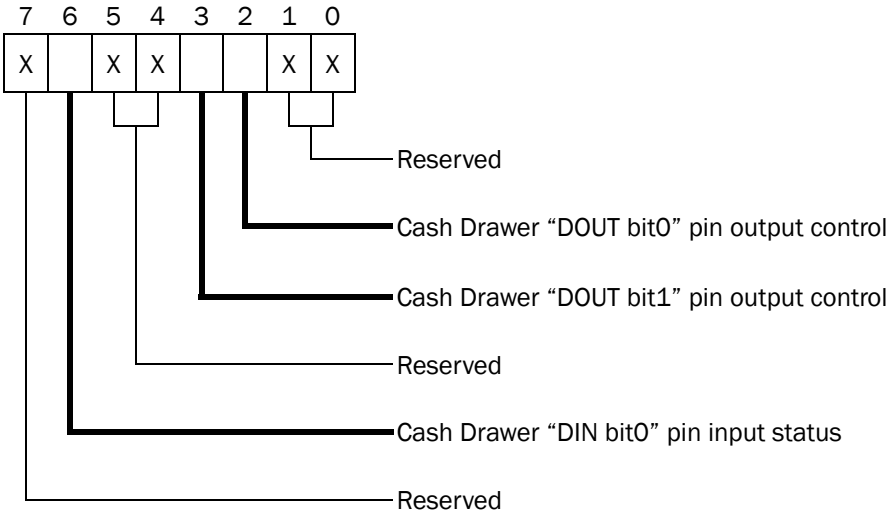

Bit 7: Reserved
Bit 6: Cash Drawer “DIN bit0” pin input status.
= 1: the Cash Drawer closed or no Cash Drawer
= 0: the Cash Drawer opened
Bit 5: Reserved
Bit 4: Reserved
Bit 3: Cash Drawer “DOUT bit1” pin output control.
= 1: Opening the Cash Drawer
= 0: Allow close the Cash Drawer
Bit 2: Cash Drawer “DOUT bit0” pin output control.
= 1: Opening the Cash Drawer
= 0: Allow close the Cash Drawer
Bit 1: Reserved
Bit 0: Reserved

Note: Please follow the Cash Drawer control signal design to control the Cash Drawer.

Cash Drawer Control Command Example

Use Debug.EXE program under DOS or Windows98

Command	**Cash Drawer**
O 48C 04	Opening
O 48C 00	Allow to close
➢ Set the I/O address 48Ch bit2 =1 for opening Cash Drawer by “DOUT bit0” pin control. ➢ Set the I/O address 48Ch bit2 = 0 for allow close Cash Drawer.	

Command	**Cash Drawer**
I 48C	Check status
➢ The I/O address 48Ch bit6 =1 mean the Cash Drawer is opened or not exist. ➢ The I/O address 48Ch bit6 =0 mean the Cash Drawer is closed.	

5 Specification

Model Name	POS314	
Motherboard	**C56L**	**D16**
CPU support	Intel Cedar View D2550 CPU, 1.86 GHz, L2 1MB	Freescale iMX6 Dual_Lite CPU, 1GHz (ARM Cortex A9) - MCIMX6U5DVM10AB
Chipset	Intel NM10	Microchip AR1021
System memory	1 x DDR3 S.O.DIMM up to 4GB, FSB 1066MHz	1GB DDR3 (RAM file system)
Graphic memory	Intel GMA 3650 (Gfx frequency up to 640MHz), DX9	8G (Boot from EMMC)
LCD Touch Panel		
LCD size	14.1” TFT LCD	
Brightness	200 nits	
Maximal resolution	1366 x 768	
Touch screen type	Regular resistive by Abon / True Flat resistive by Mildex	
Tilt angle	10°~90°	
Storage		
HDD	1 x 2.5” SATA HDD	NA
Flash memory card	SATA SSD flash card (Option)	NA
Expansion		
miniPCI-E slot	1	
Rear I/O		
USB	4 x USB Type A (default) (USB 2.0)	
Serial / COM	4 x RJ45 COM (COM1/2 standard RS232; COM3/4 powered RS232; COM2 default 0V; COM3 default 5V; COM4 default 12V by Jumper setting)	4 x RJ45 COM (COM1/COM2 default 0V by Jumper; COM3 default 5V; COM4 default 12V by APP)
LAN (10/100/1000)	1 (RJ45)	
DC jack	1 (2-pin type)	
VGA	1 (+12V power, by jumper setting)	NA
Cash drawer	1 (RJ11, 12V/24V, default 24V by Jumper setting)	1(RJ11, 12V/24V; default 24V by APP)
Power switch	1	
Mini USB	NA	1
Micro SD	NA	1
Indicator		
Power LED	1	

Model Name	**POS314**	
Motherboard	**C56L**	**D16**
Power		
Power adapter	65W/19V	
Peripherals		
MSR	1 (USB)	
iButton	1 (USB)	
Customer display	LCM display 2 x 20 characters (USB)	
Second display	optional 14.1" 2nd display without touch	NA
Communication		
Wireless LAN	802.11 b/g/n Wireless LAN card & antenna (option)	
Environment		
EMC & Safety	FCC/CE Class A, LVD	
Operating temperature	0°C ~ 35°C (32°F ~ 95°F)	
Storage temperature	-20°C ~ 60°C (-4°F ~ 140°F)	
Humidity	20% ~ 85% RH non condensing	
Dimension (W x D x H)	380mm x 180mm x 276mm	
Weight (N.W./G.W.)	3.7kg / 4.7kg	
OS support	Windows® XP Professional, Windows Embedded, POSReady 2009, Windows XP Embedded, Windows XP Professional for Embedded, WinCE, Windows 7, Linux	Android 4.2.2

* This specification is subject to change without prior notice.

6 Jumper Setting

6-1 C56L Motherboard

6-1-1 Motherboard Layout

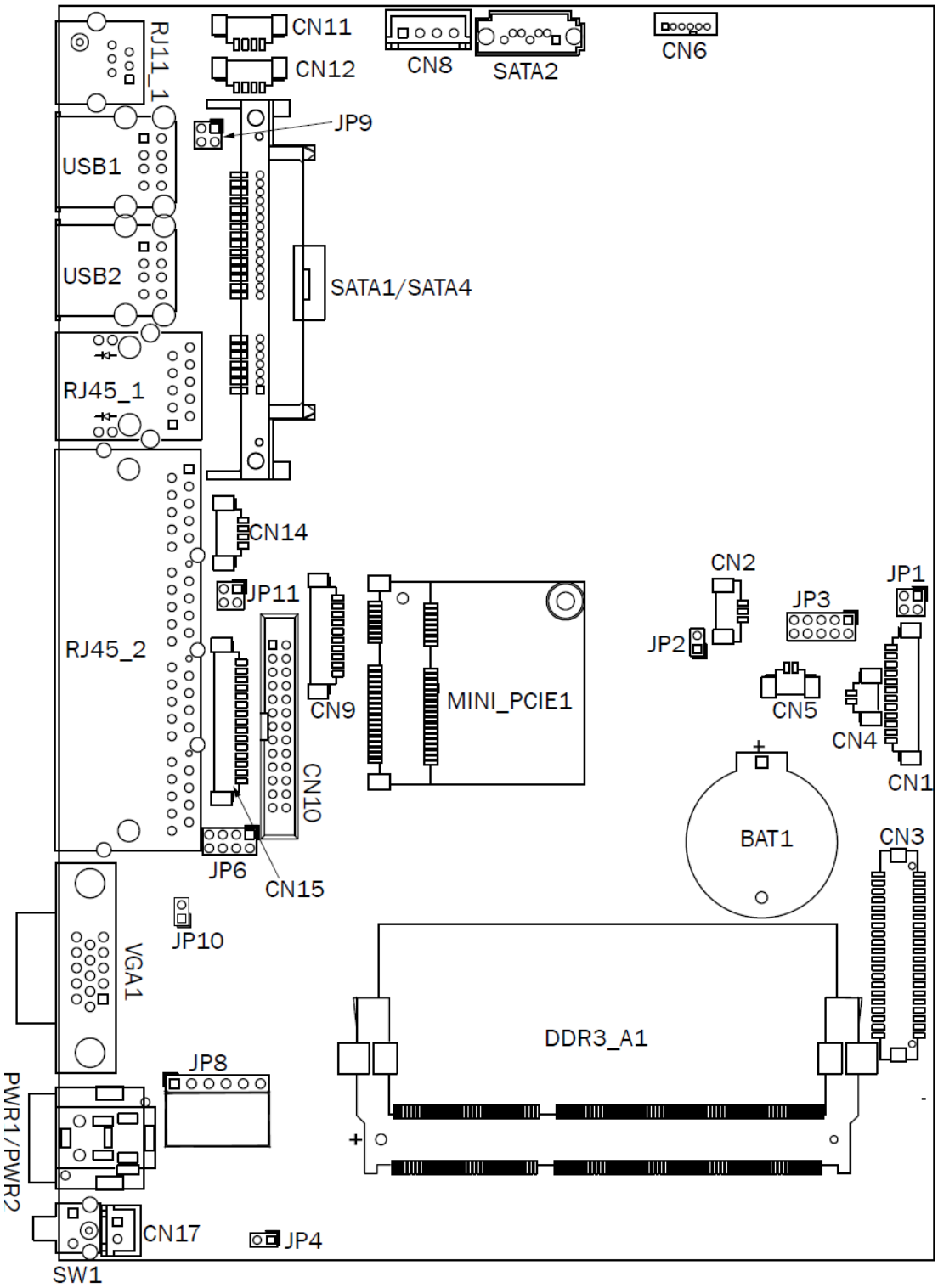

6-1-2 Connectors & Functions

Connector	Function
CN1	LVDS inverter connector
CN2	System FAN connector
CN3	LVDS connector
CN4	Power LED connector
CN5	HDD LED connector
CN6	Speaker & MIC connector
CN8	SATA power connector
CN9	COM5 (touch) connector
CN10	Printer port connector
CN11/12	USB port (internal)
CN14	PS2 keyboard connector
CN15	Card reader connector (COM6)
CN17	Power button (internal)
PWR2	DC Jack (4 pin)
PWR1	DC Jack (2 pin)
RJ11_1	Cash drawer connector
RJ45_1	LAN connector
RJ45_2	COM1/ COM2/ COM3/ COM4
DDR3_A1	DDR3 SO-DIMM
SATA1/4	SATA1
SATA2	SATA2
USB1/2	USB2.0
VGA1	CRT connector
SW1	Power button
MINI_PCIE1	MINI PCIE
JP1	Inverter select
JP3	LCD ID setting
JP6	COM3/COM4 power setting
JP8	Touch connector
JP9	Cash drawer power setting
JP10	CRT power select
JP11	MSR/PS2 keyboard select

6-1-3 Jumper Setting

Inverter Selection

Function	JP1 (1-2) (3-4)
▲LED	1 3 2 4
CCFL	1 3 2 4

Cash Drawer Power Setting

Function	JP9 (1-2) (3-4)
▲+19V	1 3 2 4
+12V	1 3 2 4

VGA Power Setting

Function	JP10 (1-2)
▲+0V	1 2
+12V	1 2

▲ = Manufacturer Default Setting OPEN SHORT

MSR/PS2 Keyboard Power Setting

Function	JP11 (1-2) (3-4)
▲MSR + PS2 Keyboard	1 3 2 4
MSR	1 3 2 4
Only PS2	1 3 2 4

COM 3 & COM4 Power Setting

Function	JP6 (1-2) (3-4) (5-6) (7-8)
COM3 +0V	1 3 5 7 2 4 6 8
▲COM3 +5V	1 3 5 7 2 4 6 8
COM3 +12V	1 3 5 7 2 4 6 8
COM4 +0V	1 3 5 7 2 4 6 8
COM4 +5V	1 3 5 7 2 4 6 8
▲COM4 +12V	1 3 5 7 2 4 6 8

▲ = Manufacturer Default Setting OPEN SHORT

LCD ID Setting

Panel Number	Resolution	LVDS		Output Interface	JP3 (1-2) (3-4) (5-6) (7-8) (9-10)
		Bits	Channel		
1	800 x 600	18	Single	LVDS Panel	1 [3 5 7] 9 2 [4 6 8] 10
2	800 x 600	18	Single	LVDS Panel	[1 3 5 7] 9 [2 4 6 8] 10
3	800 x 600	24	Single	LVDS Panel	1 3 [5 7] 9 2 4 [6 8] 10
4	1024 x 600	18	Single	LVDS Panel	[1 3] 5 [7] 9 [2 4] 6 [8] 10
5	1024 x 768	18	Single	LVDS Panel	1 [3] 5 [7] 9 2 [4] 6 [8] 10
6	800 x 600	24	Single	LVDS Panel	[1] 3 5 [7] 9 [2] 4 6 [8] 10
7	1024 x 768	24	Single	LVDS Panel	1 3 5 [7] 9 2 4 6 [8] 10
10	1366 x 768	18	Single	LVDS Panel	[1] 3 [5] 7 9 [2] 4 [6] 8 10
11	1366 x 768	24	Single	LVDS Panel	1 3 [5] 7 9 2 4 [6] 8 10
				CRT	1 3 5 7 [9] 2 4 6 8 [10]

▲ = Manufacturer Default Setting OPEN SHORT

6-2 D16 Motherboard

6-2-1 Motherboard Layout

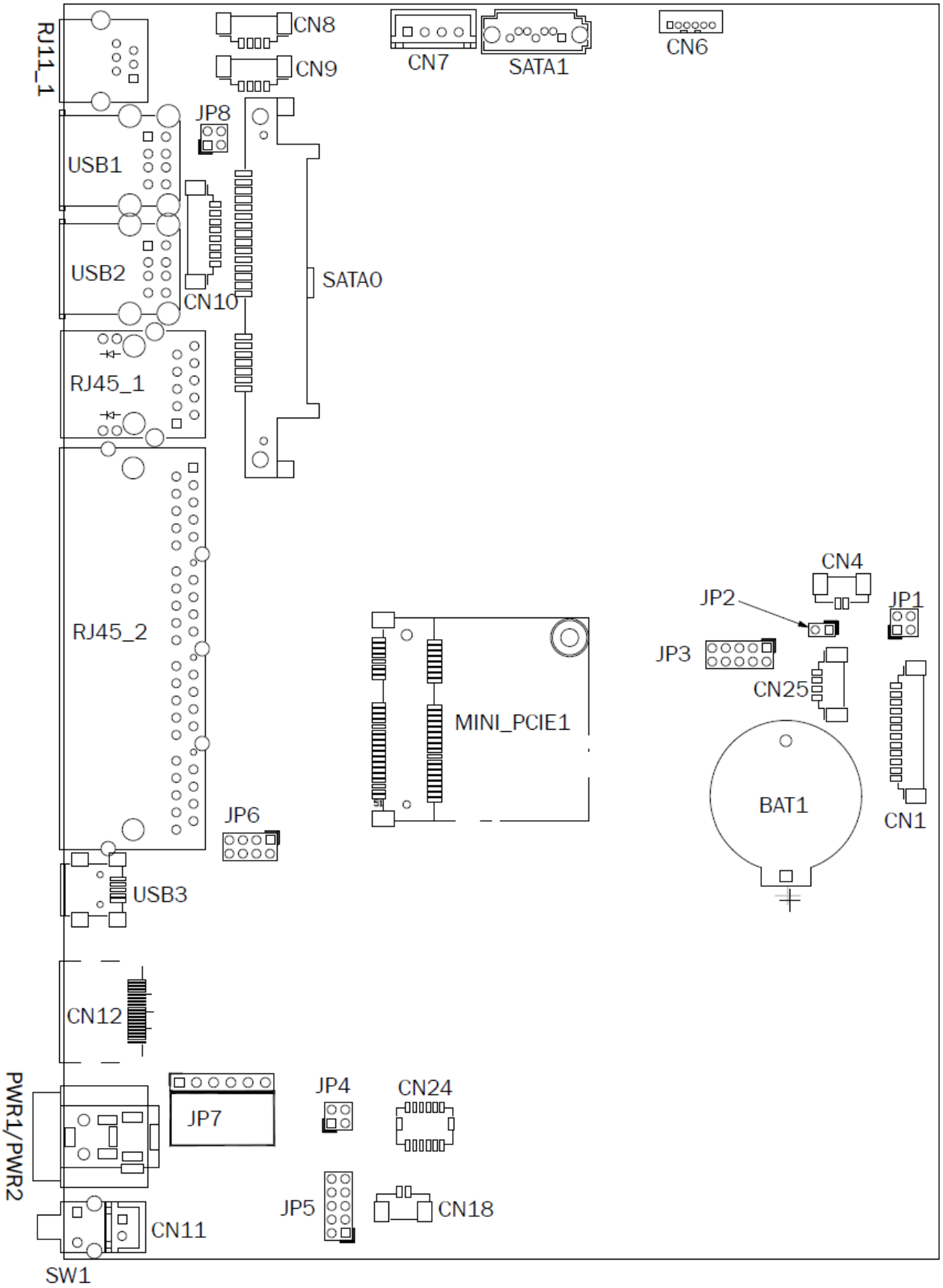

D16 V1.0 Top Layer

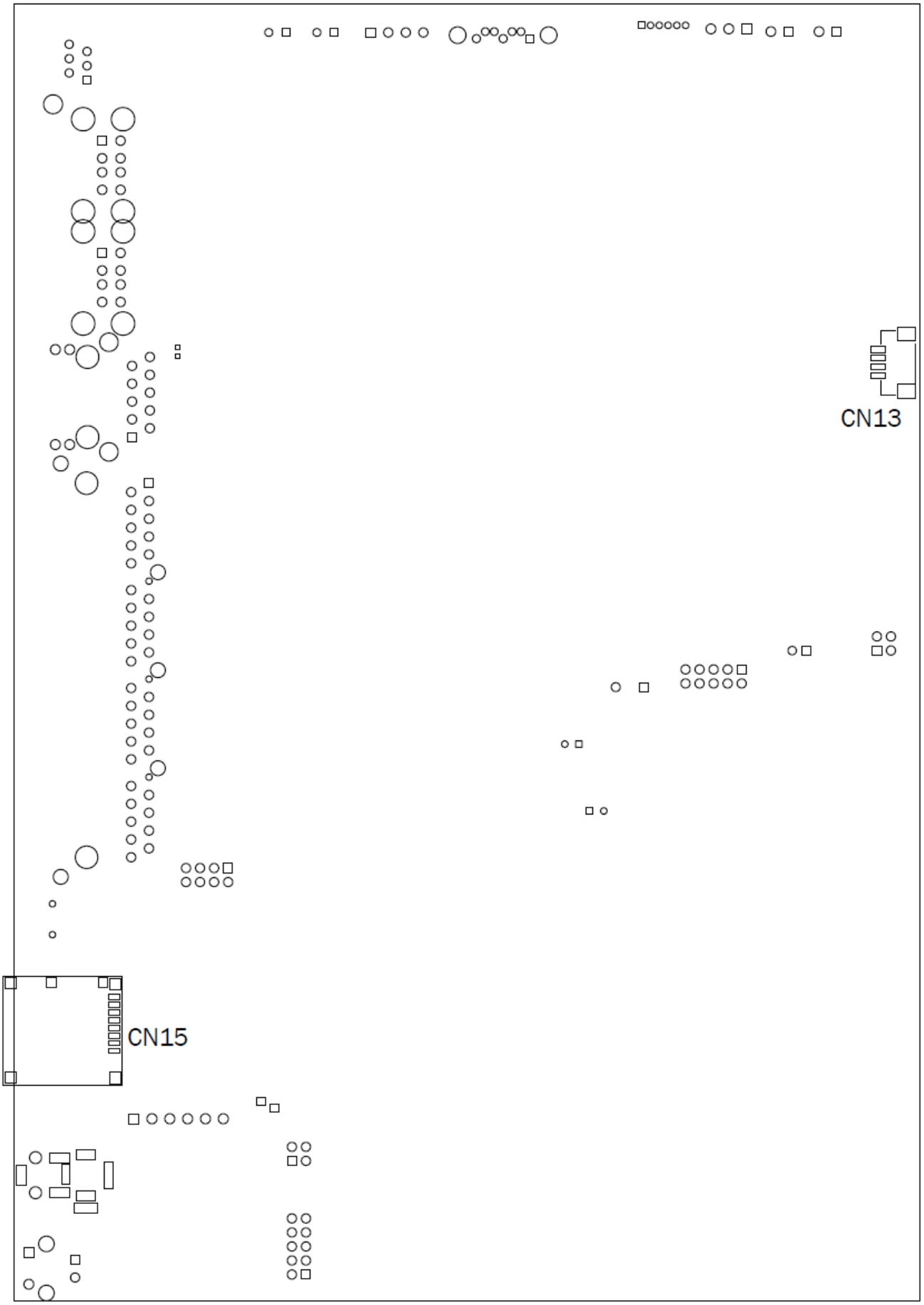

D16 V1.0 Bottom Layer

6-2-2 Connectors & Functions

Connector	Function
CN1	LVDS inverter connector
CN3	LVDS connector
CN4	Power LED connector
CN6	Speaker & MIC connector
CN7	SATA power connector
CN8/9	USB port (internal)
CN11	Power button connector
CN13	USB port (internal for LCM)
CN15	Micro SD card slot
CN18	HDD LED connector
CN24	NFC connector
CN25	USB port (internal)
PWR1	DC Jack (2 pin)
PWR2	DC Jack (4 pin)
RJ11_1	Cash drawer connector
RJ45_1	LAN connector
RJ45_2	COM1/ COM2/ COM3/ COM4
USB1/2	USB2.0
SW1	Power button
MINI_PCIE1	MINI PCI Expres slot
JP1	Inverter select
JP3	LCD ID setting
JP4	COM1 for debug setting
JP5	Boot source setting
JP6	COM3/4 power setting
JP7	Touch connector
JP8	Cash drawer power setting

6-2-3 Jumper Setting

Inverter Selection

Function	JP1 (1-2) (3-4)
▲LED	1 3 2 4
CCFL	1 3 2 4

Debug Port Setting

Function	JP4 (1-2) (3-4)
▲COM1	1 3 2 4
COM debug	1 3 2 4

Boot Source Setting

Function	JP5 (1-2) (3-4) (5-6) (7-8) (9-10)
▲eMMC	1 3 5 7 9 2 4 6 8 10
SD	1 3 5 7 9 2 4 6 8 10
USB (download)	1 3 5 7 9 2 4 6 8 10

▲ = Manufacturer Default Setting  OPEN  SHORT

Cash Drawer Power Setting

Function	JP8 (1-2) (3-4)
+12V	1 3 2 4
+19V	1 3 2 4
▲ Controlled by MCU	1 3 2 4

COM 1 & COM2 Power Setting

Function	JP6 (1-2) (3-4) (5-6) (7-8)
COM1 +5V	1 3 5 7 2 4 6 8
COM1 +12V	1 3 5 7 2 4 6 8
▲COM1 +0V	1 3 5 7 2 4 6 8
COM2 +5V	1 3 5 7 2 4 6 8
COM2 +12V	1 3 5 7 2 4 6 8
▲COM2 +0V	1 3 5 7 2 4 6 8

▲ = Manufacturer Default Setting OPEN SHORT

LCD ID Setting

Panel Number	Resolution	LVDS		Output Interface	JP3 (1-2) (3-4) (5-6) (7-8) (9-10)
		Bits	Channel		
1	1024 x 768	24	Single	LVDS Panel	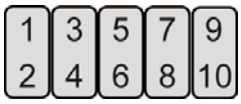
2	1366 x 768	18	Single	LVDS Panel	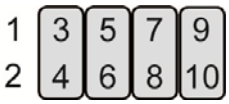

▲ = Manufacturer Default Setting  OPEN  SHORT

COM3/COM4 Power Setting

COM3 and COM4 can be set to provide power to your serial device.
The voltage can be set to +5V or +12V by setting the Android APPS.

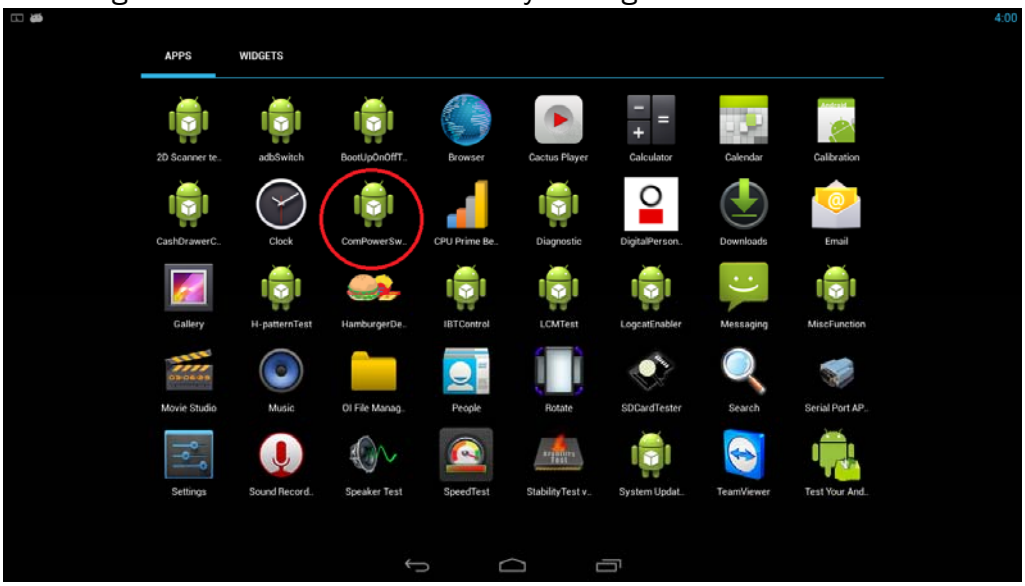

1. Enter APPS and double click on **ComPowerSwitch 1.0.**

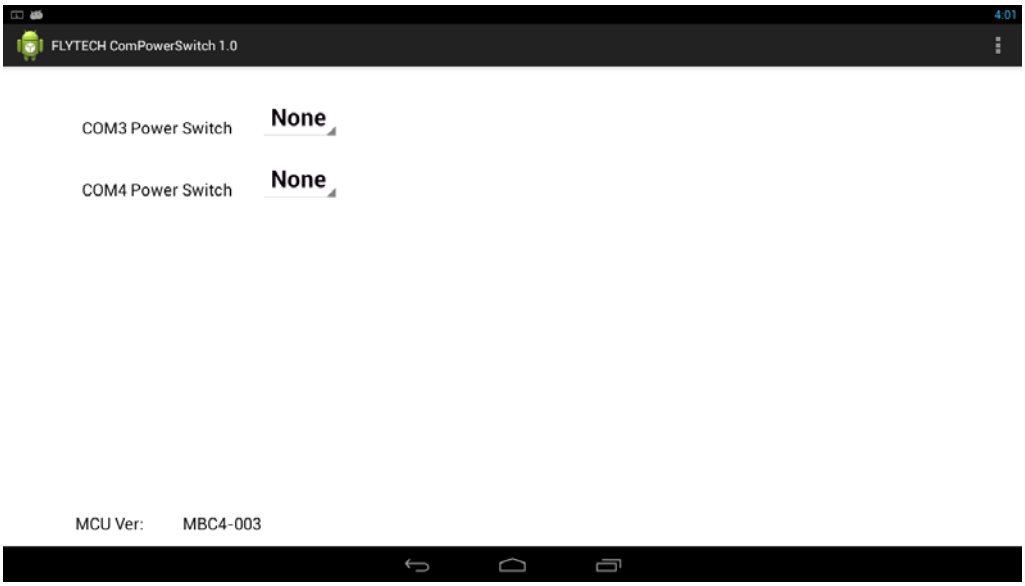

2. To enable the power, pull the drop down menu to select the power for COM3 or COM4.

Cash Drawer Power Setting

Cash drawer can be set to provide power to your serial device.
The voltage can be set to +12V or +19V by setting the Android APPS.

1. Enter APPS and double click on **CashDrawerControl 1.0.**

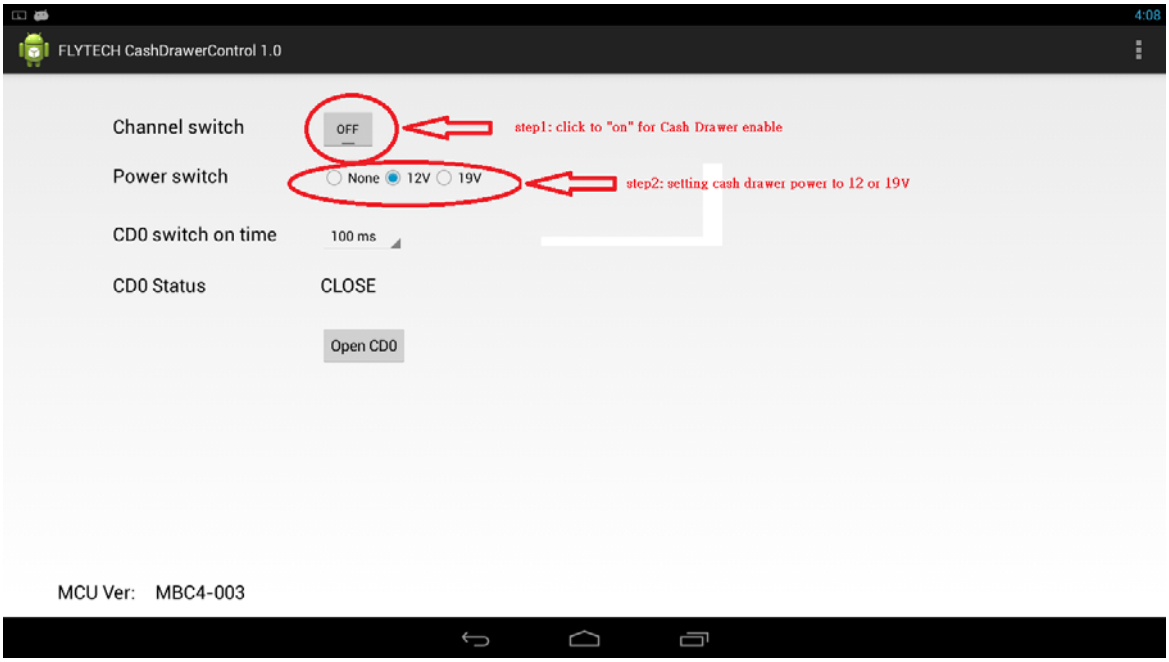

2. To enable the power, click the icon to turn the power switch on.
3. Select +12V or +19V for cash drawer power.

Appendix: Driver Installation

The shipping package includes a Driver CD. You can find every individual driver and utility that enables you to install the drivers in the Driver CD (Andrioid driver is included in the OS).

Please insert the Driver CD into the drive and double click on the “index.htm” to pick the models. You can refer to the drivers installation guide for each driver in the “Driver/Manual List”.